RCA Victor Models 4VF095, 4VF096, 4VF105, 4VF106, 4VF114, 4VF124, 4VF145, 4VF146, 4VF155, 4VF156, 4VF206, 4VF224, 4VF282, 4VF289, use Chassis RC-1215A & B Tuner and Amplifier Chassis RS-203A

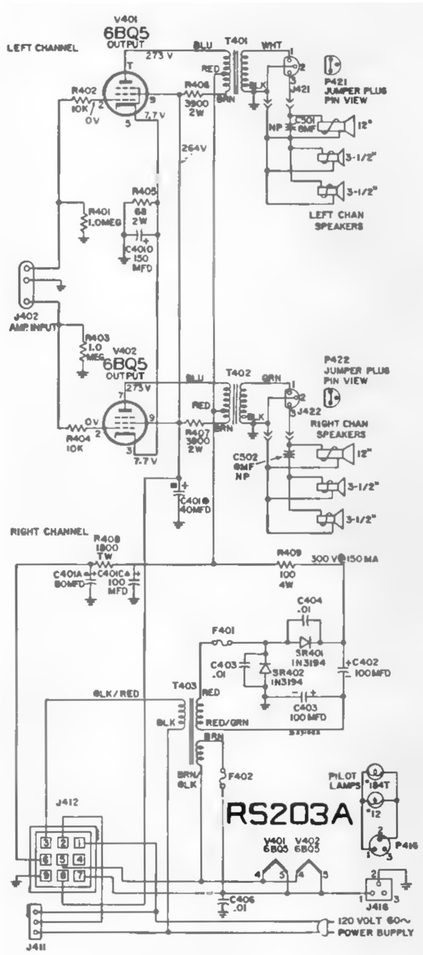

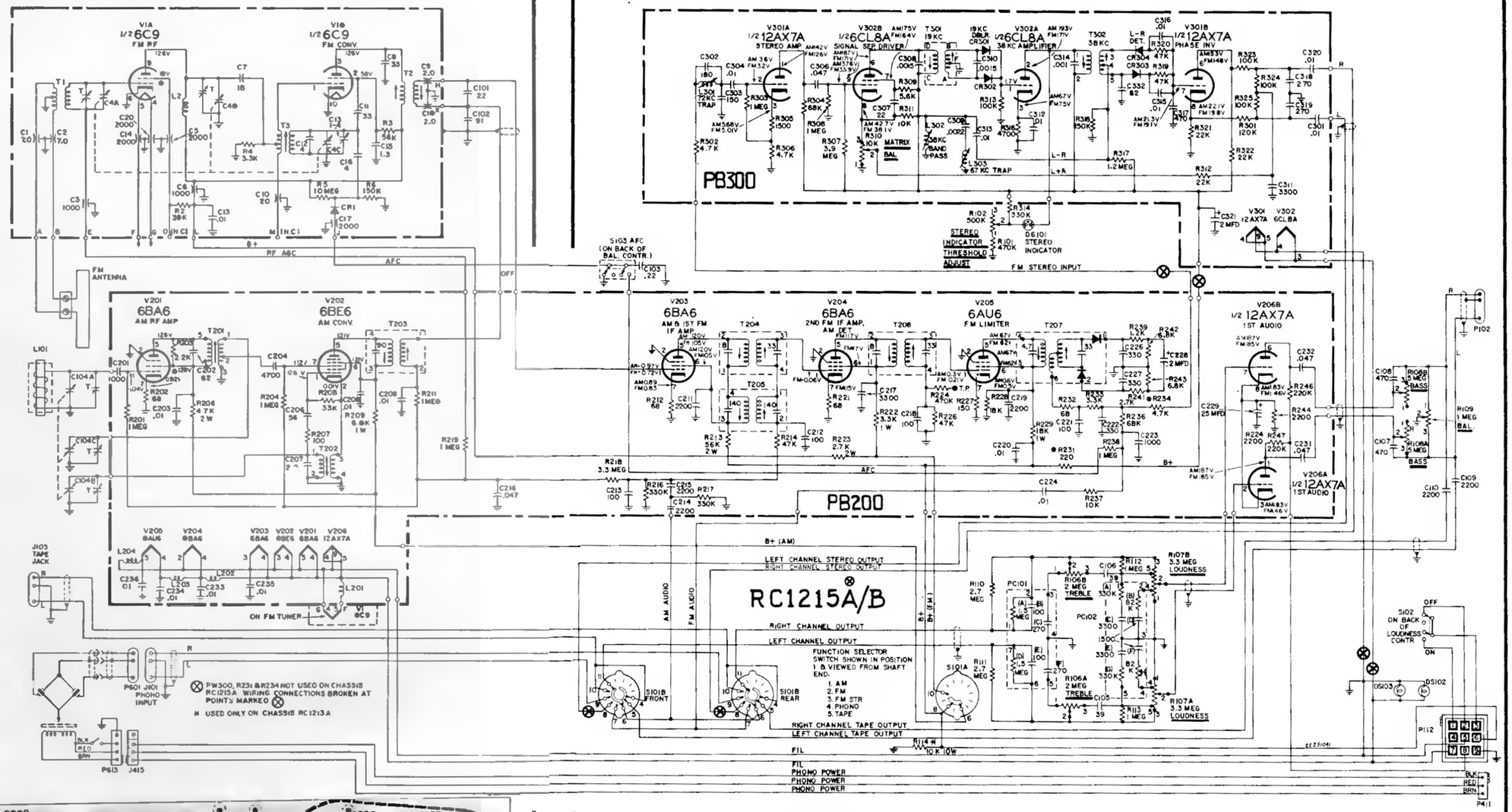

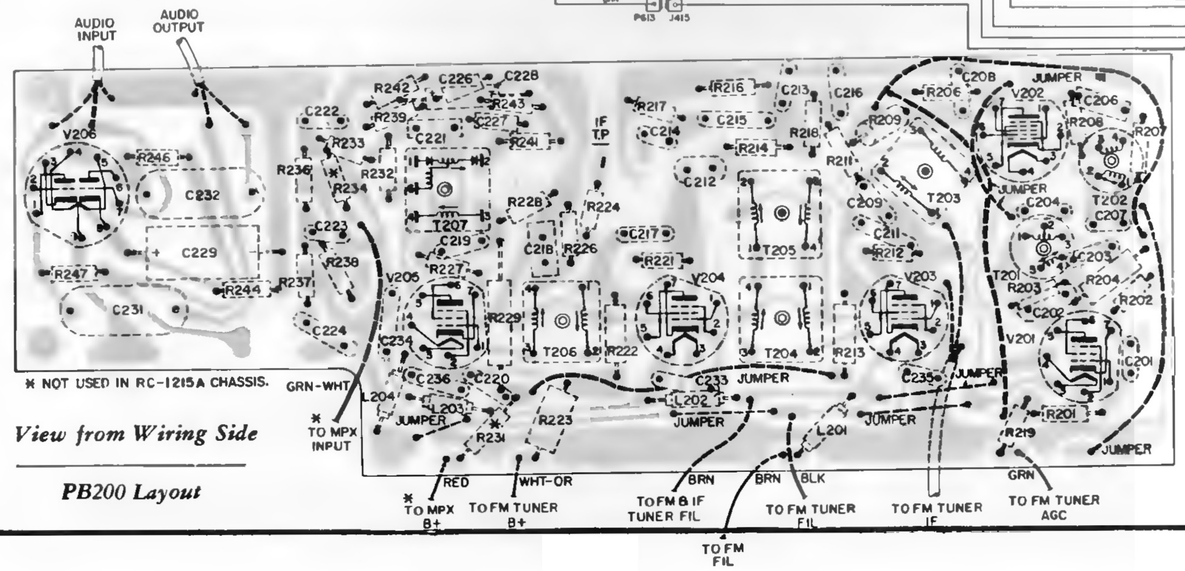

View from Wiring Side

PB200 Layout

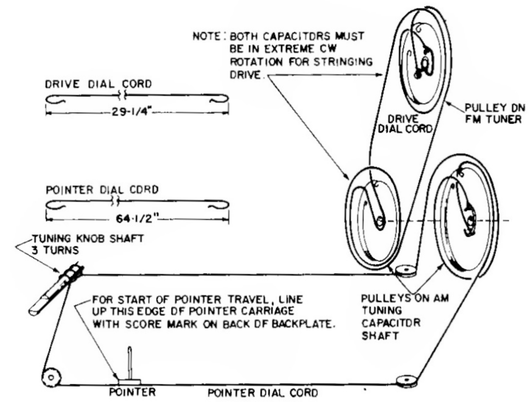

Dial Cord Arrangement

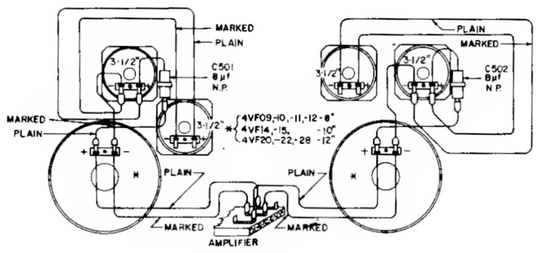

Speaker Wiring

RCA Victor Models 4VF095, 4VF096, 4VF105, 4VF106, 4VF114, 4VF124, 4VF145, 4VF146, 4VF155, 4VF156, 4VF206, 4VF224, 4VF282, 4VF289, use Tuner Chassis RC-1215A & B, Amplifier RS-203A

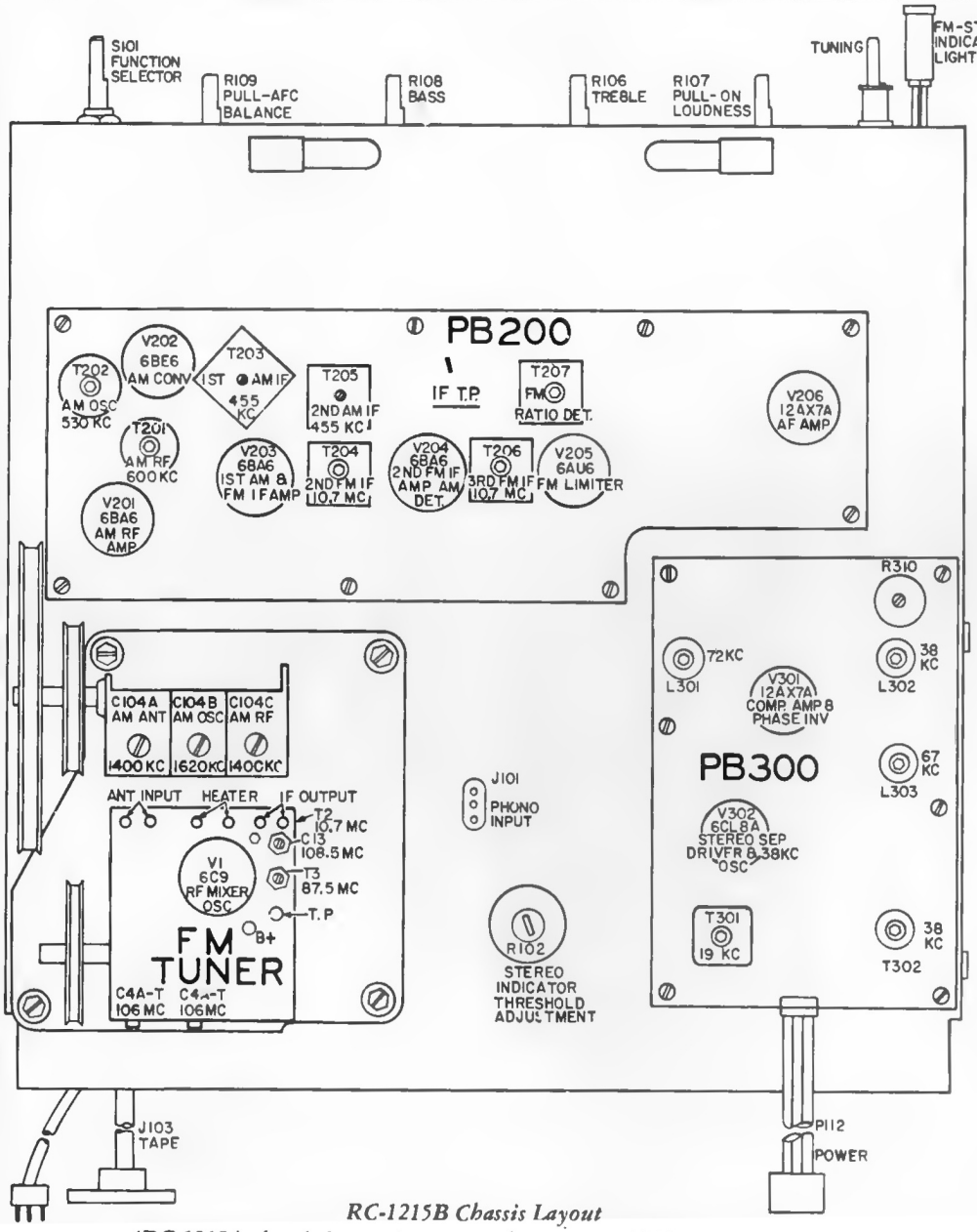

RC-1215B Chassis Layout

(RC-1215A chassis layout is same as above except PB300 is omitted)

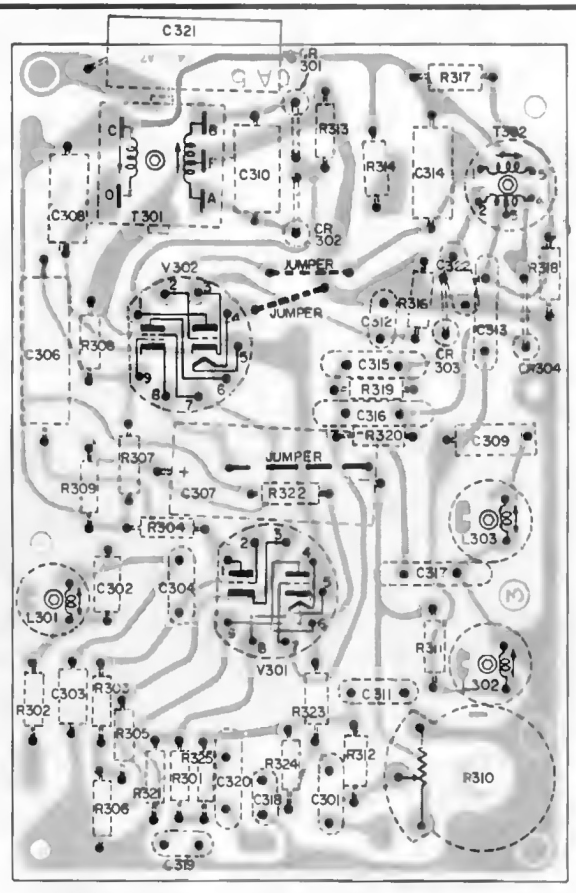

PB300 Layout View from Wiring Side

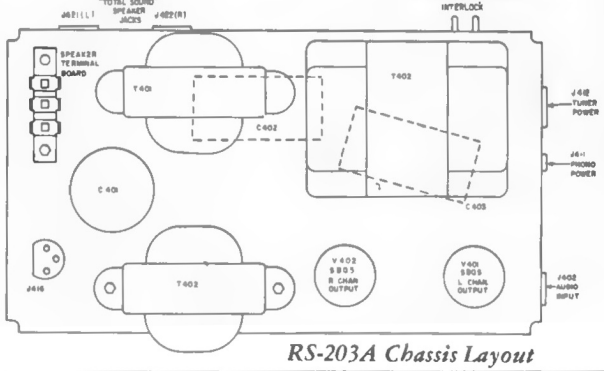

RS-203A Chassis Layout